WAVE RIDER 4 LIGHTING INVERTER TYPICAL SINGLE LINE DIAGRAM

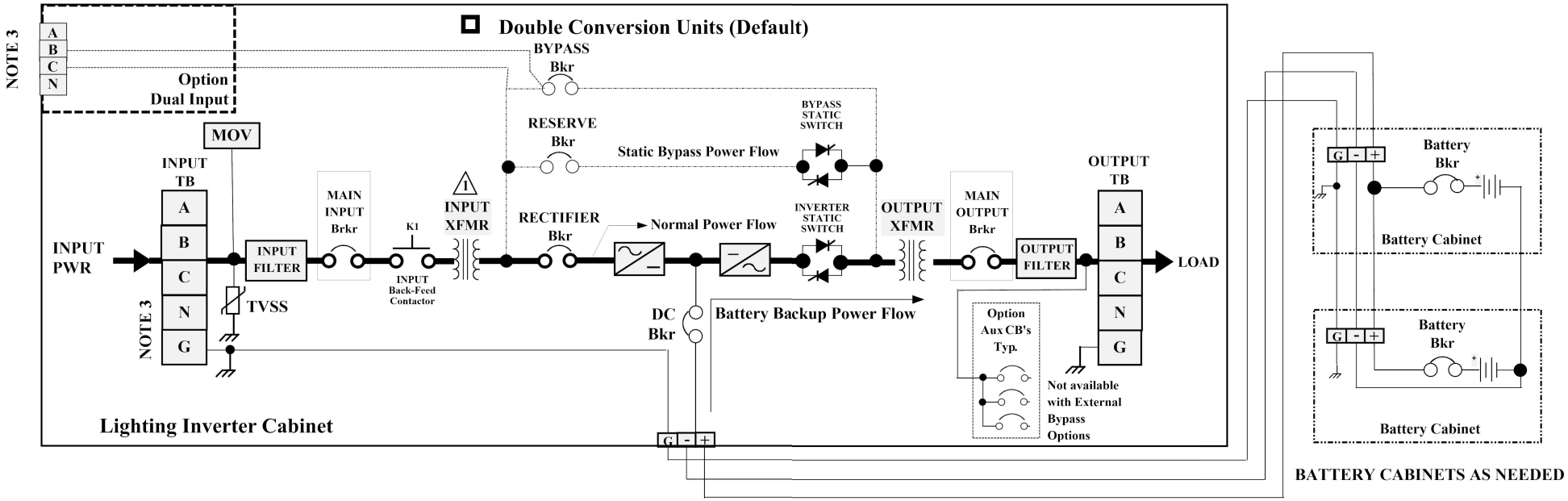

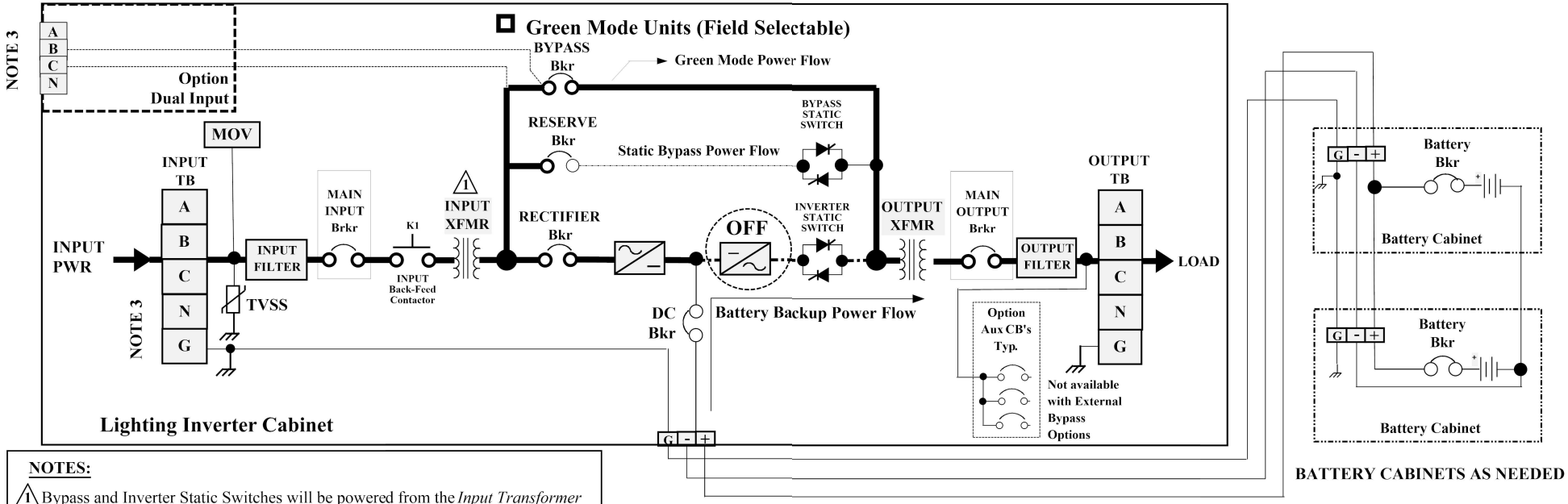

NOTES:

1. Bypass and Inverter Static Switches will be powered from the *Input Transformer* for different input and output voltage configurations.
2. Power Flow is through Static Bypass Switch **(WHEN IN GREEN MODE)** during Input Power Drop
3. **Optional Delta Units are available. Neutral not required.**
4. Battery Cabinet Quantity might vary depending on the Battery type.

TYPICAL WR4 LIGHTING INVERTER SINGLE LINE DIAGRAM			SHT 1 OF 1
CRUCIAL POWER PRODUCTS — SUBJECT TO CHANGE WITHOUT NOTICE			
DRAWN : SS	4/17/24	420-TD-010	REV A
APPVD : HN	4/17/24		

WAVE RIDER 4 INVERTER CABINET

ELECTRONIC CABINET ONLY (10 KVA THRU 60 KVA)

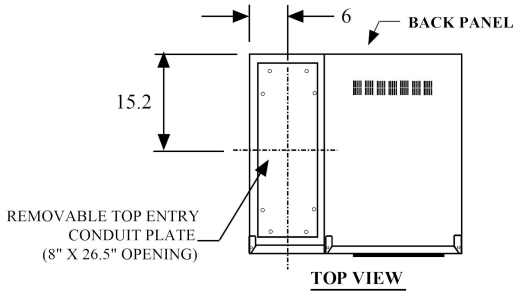

INSTALLATION WITH SEISMIC BRACKETS FOR ZONE 4 TOP VIEW

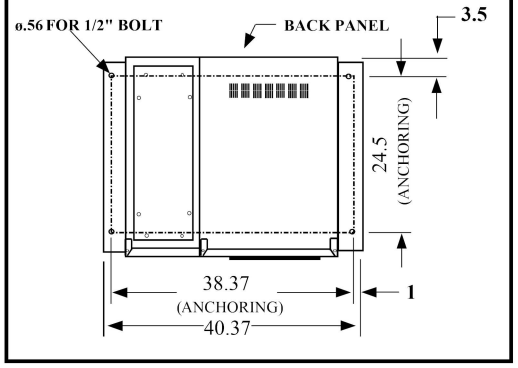

NOTES:

1) CONSTRUCTION: INDOOR, COLOR BLACK.
2) KNOCKOUTS ON CONDUIT PLATES TO BE DONE BY INSTALLING CONTRACTOR
3) DIMENSIONS ARE IN INCHES

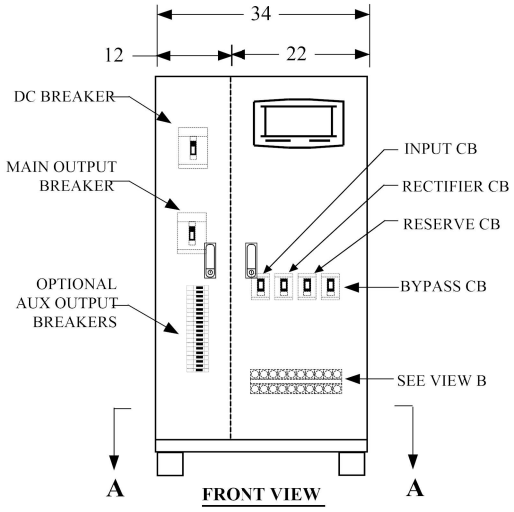

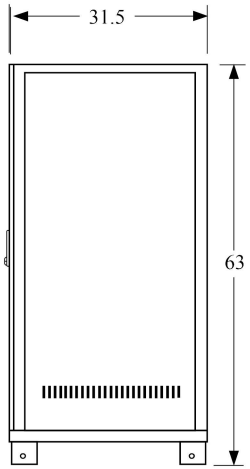

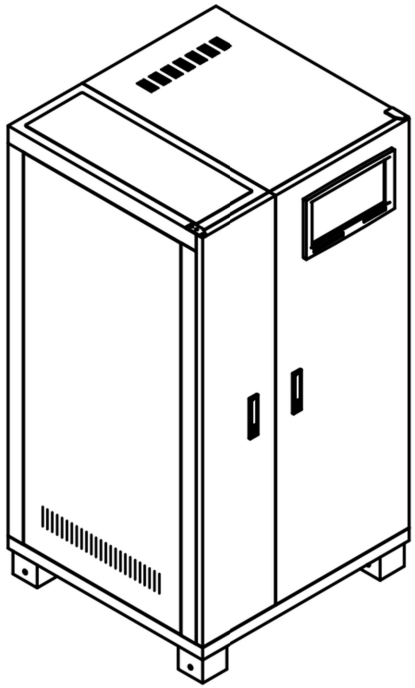

ISOMETRIC VIEW

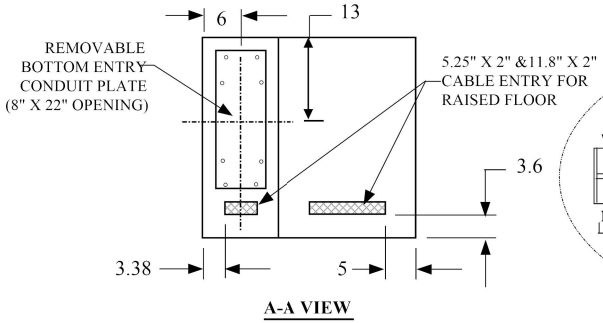

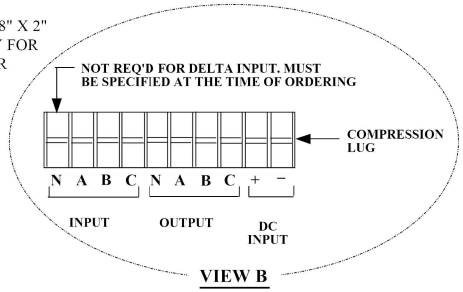

WAVE RIDER 4 INVERTER CABINET			SHT 1 OF 1
CRUCIAL POWER PRODUCTS — SUBJECT TO CHANGE WITHOUT NOTICE			
DRAWN :SHERRIS.	04/17/24	420-TD-011	REV A
APPVD: HN	04/17/24		

WAVE RIDER 4 INVERTER CABINET

ELECTRONIC CABINET ONLY (80 KVA THRU 160 KVA)

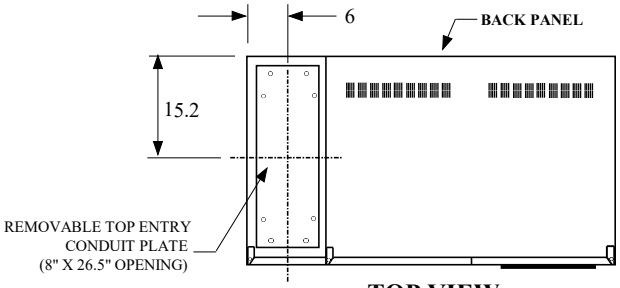

TOP VIEW

INSTALLATION WITH SEISMIC BRACKETS FOR ZONE 4 TOP VIEW

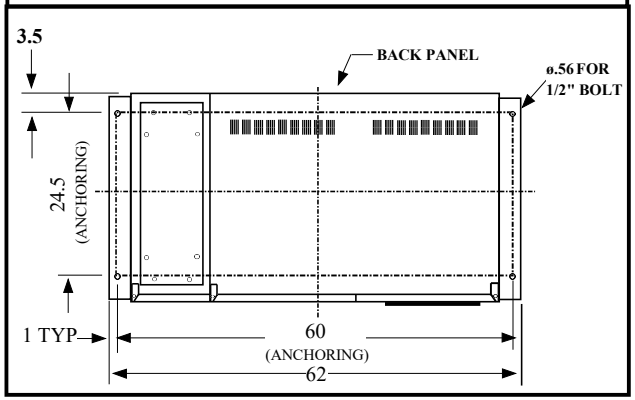

NOTES:

1) CONSTRUCTION: INDOOR, COLOR BLACK.
2) KNOCKOUTS ON CONDUIT PLATES TO BE DONE BY INSTALLING CONTRACTOR
3) DIMENSIONS ARE IN INCHES

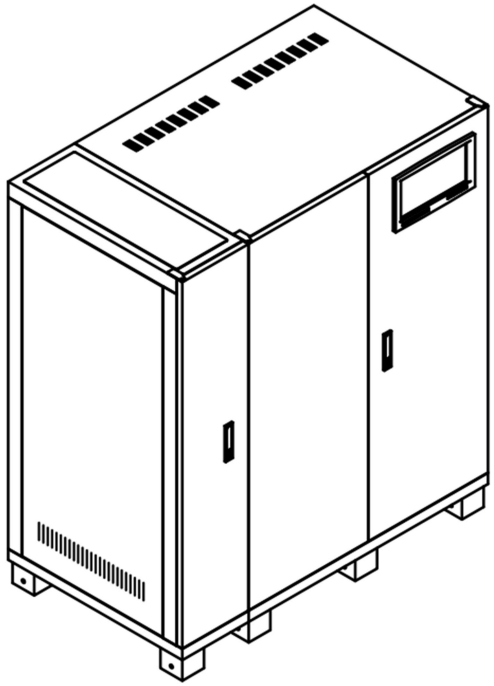

ISOMETRIC VIEW

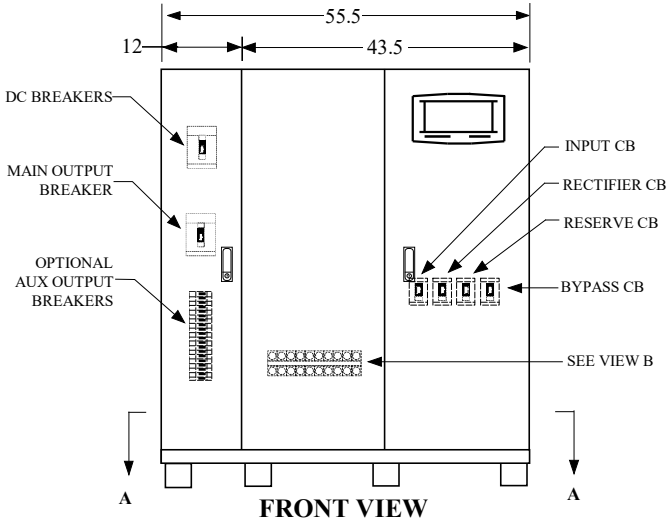

FRONT VIEW

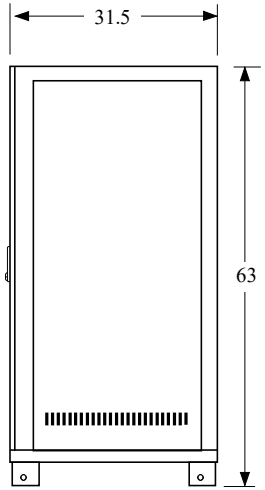

SIDE VIEW

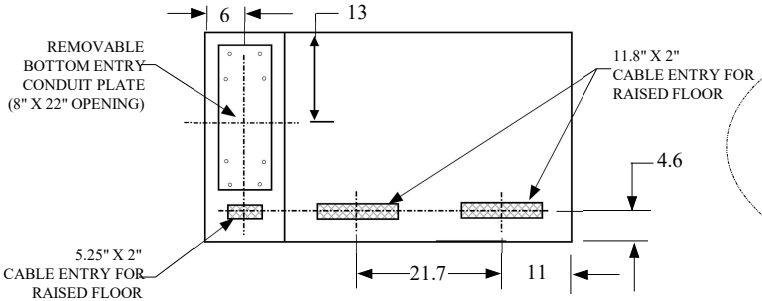

A-A VIEW

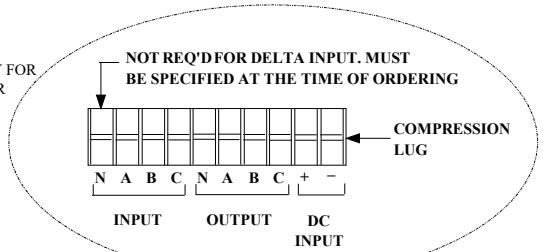

VIEW B

WAVE RIDER 4 INVERTER CABINET			SHT 1 OF 1
CRUCIAL POWER PRODUCTS	SUBJECT TO CHANGE WITHOUT NOTICE		
DRAWN : SHERRI S.	04/17/24	420-TD-012	REV A
APPVD : HN	04/17/24		

BATTERY CABINET (10KVA THRU 60KVA), STANDARD VRLA BATTERY

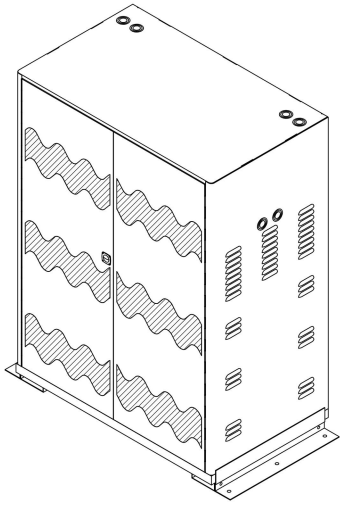

ISO VIEW SHOWN WITH SEISMIC BRACKETS

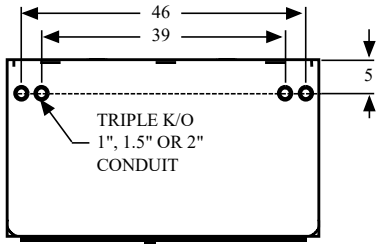

TOP VIEW

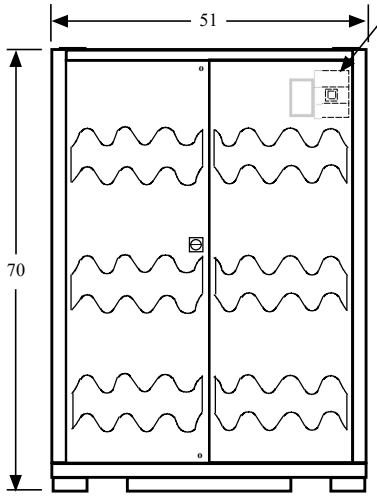

FRONT VIEW

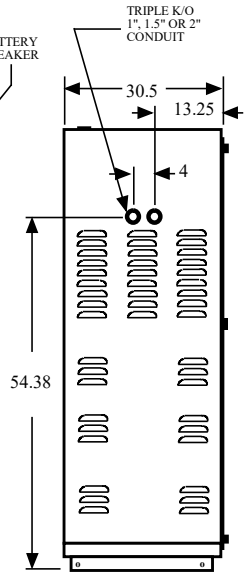

SIDE VIEW

INSTALLATION WITH SEISMIC BRACKETS FOR ZONE 4 BOTTOM VIEW

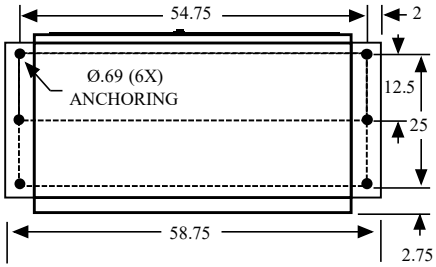

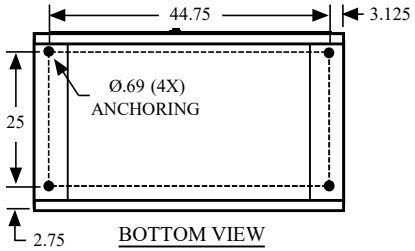

BOTTOM VIEW

RECOMMENDED SYSTEM LAYOUT

STANDARD VRLA BATTERY

KVA/KW	BATTERY CABINET QTY 90 MIN.	BATTERY CABINET QTY 120 MIN.
10KVA/8KW	**1**	**1**
20KVA/16KW	**1**	**1**
30KVA/24KW	**1**	**1**
40KVA/32KW	**2**	**2**
50KVA/40KW	**2**	**2**
60KVA/48KW	**2**	**2**

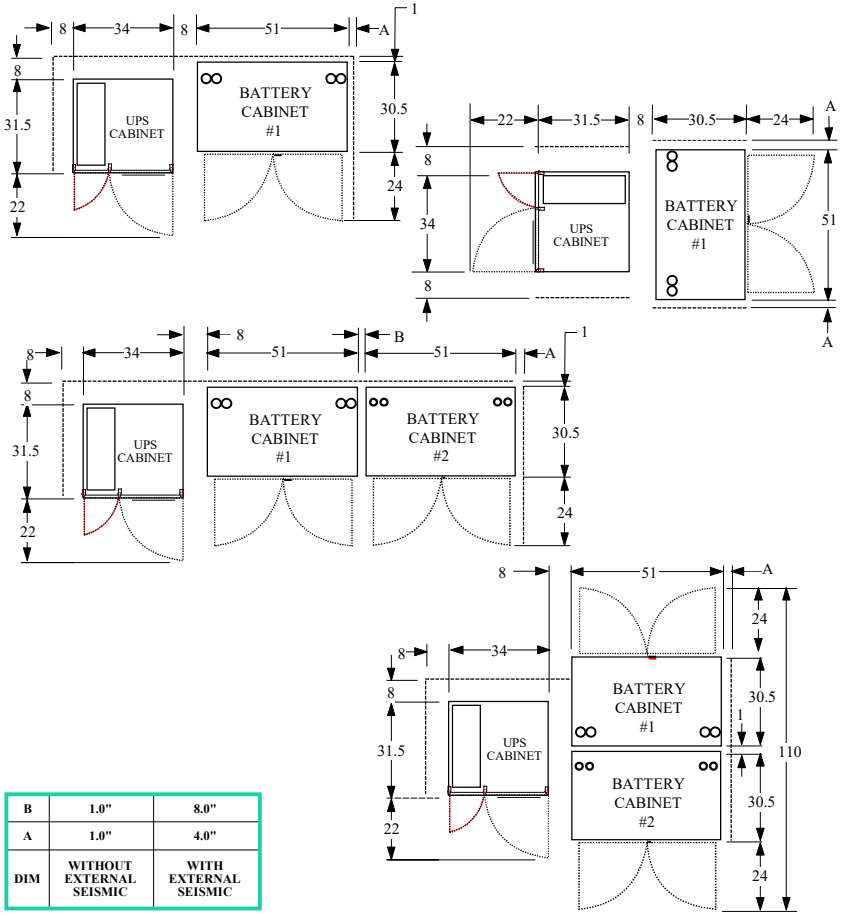

B	1.0"	8.0"
A	1.0"	4.0"
DIM	WITHOUT EXTERNAL SEISMIC	WITH EXTERNAL SEISMIC

NOTES:

1) CONSTRUCTION:NEMA1 INDOOR

2) OPTIONAL SEISMIC BRACKETS AVAILABLE:

ANCHORS FOR EXTERNAL SEISMIC BRACKET:

1. USE 1/2" DIA x 2-3/8"MIN. EMBED. HILTI KB-TZ. ICC ESR-1917 OR APPROVED EQUAL (6) TOTAL PER CABINET.
2. CONCRETE: 5" THICK x 2,500 PSI. (MIN. REQ'D).
3. SOIL BEARING PRESSURE: 500 PSF. (MIN. REQ'D).

FOR ALL DETAILS REFER TO SEISMIC DWG. FOR EACH CABINET MOUNTING

3) DIMENSIONS ARE IN INCHES

WAVE RIDER 4 BATTERY CABINET (51" WIDE)			SHT 1 OF 1
CRUCIAL POWER PRODUCTS		SUBJECT TO CHANGE WITHOUT NOTICE	
DRAWN : SS	4/17/24	420-TD-013	REV A
APPVD : HN	4/17/24		

BATTERY CABINET (10KVA THRU 60KVA), LONG LIFE BATTERY

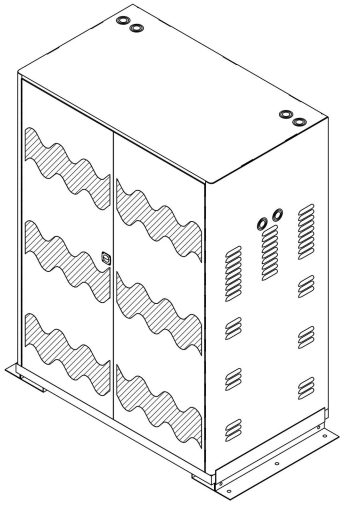

ISO VIEW SHOWN WITH SEISMIC BRACKETS

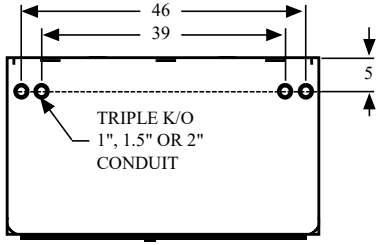

TOP VIEW

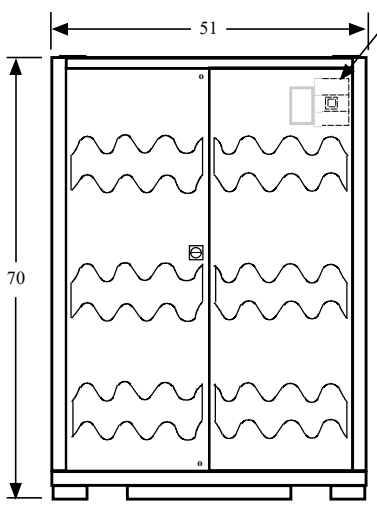

FRONT VIEW

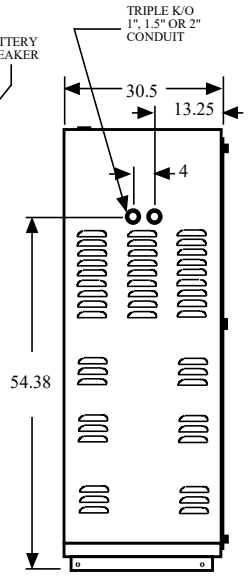

SIDE VIEW

INSTALLATION WITH SEISMIC BRACKETS FOR ZONE 4 BOTTOM VIEW

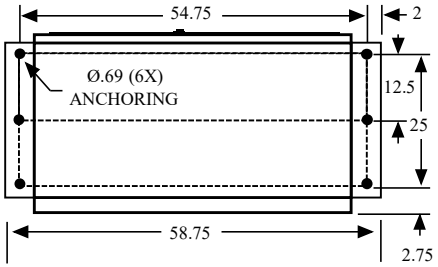

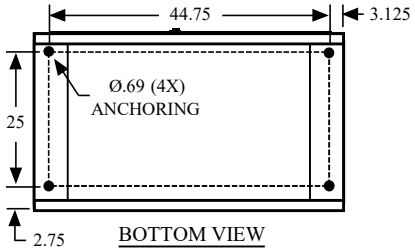

BOTTOM VIEW

NOTES:

1) CONSTRUCTION:NEMA1 INDOOR

2) OPTIONAL SEISMIC BRACKETS AVAILABLE:

ANCHORS FOR EXTERNAL SEISMIC BRACKET:

1. USE 1/2" DIA x 2-3/8"MIN. EMBED. HILTI KB-TZ. ICC ESR-1917 OR APPROVED EQUAL (6) TOTAL PER CABINET.
2. CONCRETE: 5" THICK x 2,500 PSI. (MIN. REQ'D).
3. SOIL BEARING PRESSURE: 500 PSF. (MIN. REQ'D).

FOR ALL DETAILS REFER TO SEISMIC DWG. FOR EACH CABINET MOUNTING

3) DIMENSIONS ARE IN INCHES

RECOMMENDED SYSTEM LAYOUT

LONG LIFE BATTERY

KVA/KW	BATTERY CABINET QTY 90 MIN.	BATTERY CABINET QTY 120 MIN.
10KVA/8KW	**1**	**1**
20KVA/16KW	**1**	**1**
30KVA/24KW	**1**	**1**
40KVA/32KW	**1**	**2**
50KVA/40KW	**2**	**2**
60KVA/48KW	**2**	**2**

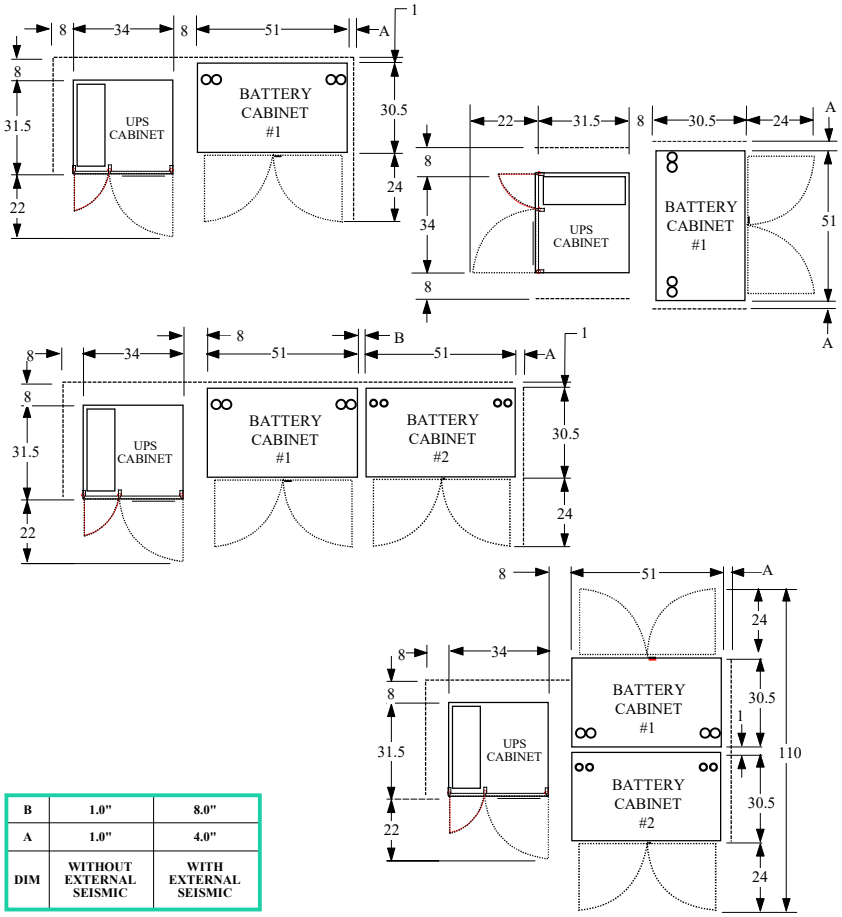

B	1.0"	8.0"
A	1.0"	4.0"
DIM	WITHOUT EXTERNAL SEISMIC	WITH EXTERNAL SEISMIC

WAVE RIDER 4 BATTERY CABINET (51" WIDE)

SHT 1 OF 1

CRUCIAL POWER PRODUCTS

SUBJECT TO CHANGE WITHOUT NOTICE

DRAWN : SS	4/17/24	420-TD-014	REV A
APPVD : HN	4/17/24		

BATTERY CABINET (80KVA THRU 160KVA), STANDARD VRLA BATTERY

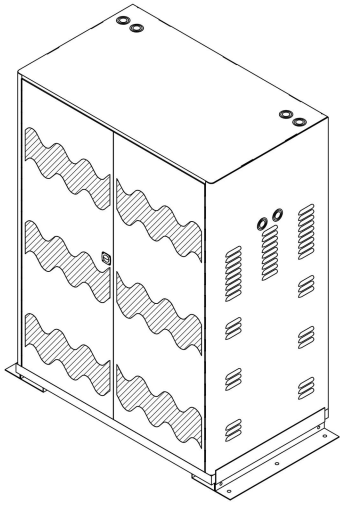

ISO VIEW SHOWN WITH SEISMIC BRACKETS

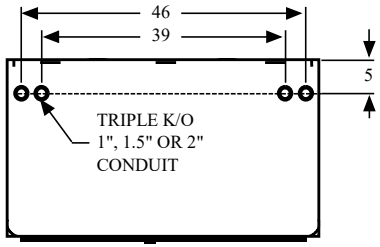

TOP VIEW

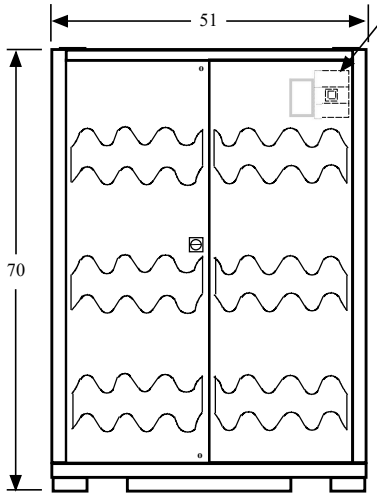

FRONT VIEW

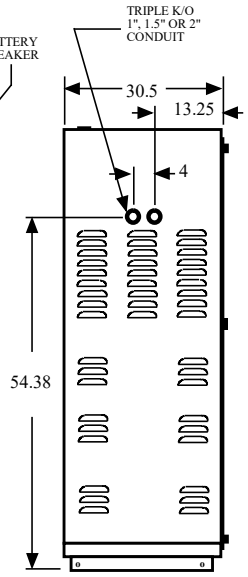

SIDE VIEW

INSTALLATION WITH SEISMIC BRACKETS FOR ZONE 4 BOTTOM VIEW

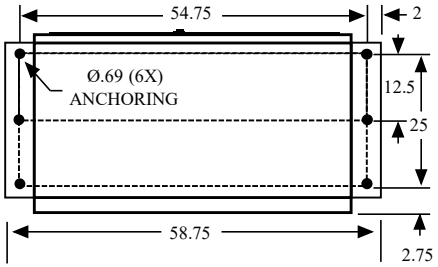

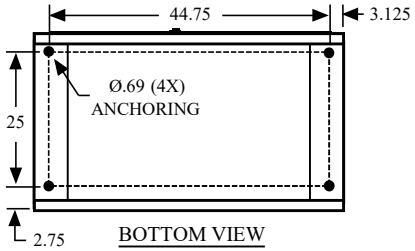

BOTTOM VIEW

RECOMMENDED SYSTEM LAYOUT

STANDARD VRLA BATTERY		
KVA/KW	BATTERY CABINET QTY 90 MIN.	BATTERY CABINET QTY 120 MIN.
80KVA/64KW	**2**	**3**
100KVA/80KW	**3**	**4**
120KVA/96KW	**4**	**4**
160KVA/128KW	**LONG LIFE BATTERY ONLY**	**LONG LIFE BATTERY ONLY**

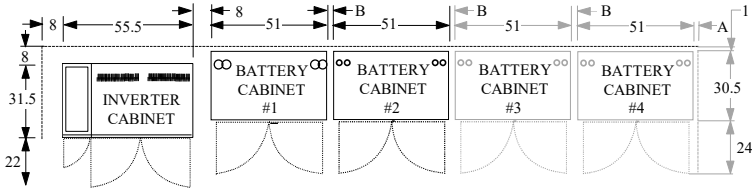

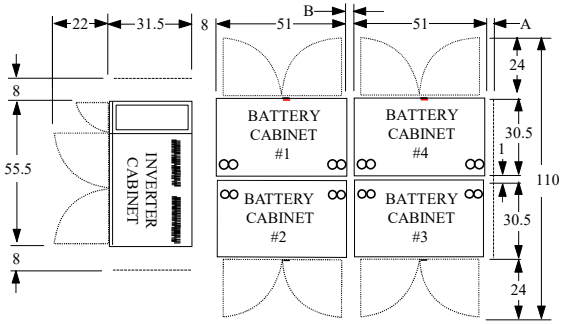

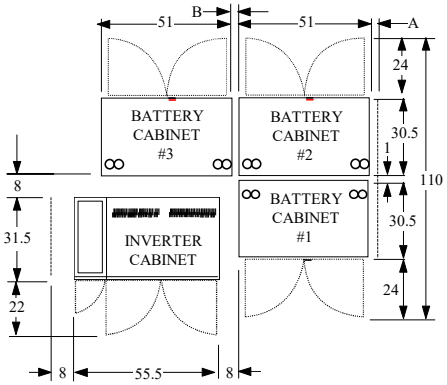

B	**1.0"**	**8.0"**
A	**1.0"**	**4.0"**
DIM	**WITHOUT EXTERNAL SEISMIC**	**WITH EXTERNAL SEISMIC**

NOTES:

1) CONSTRUCTION:NEMA1 INDOOR

2) OPTIONAL SEISMIC BRACKETS AVAILABLE:

ANCHORS FOR EXTERNAL SEISMIC BRACKET:

1. USE 1/2" DIA x 2-3/8"MIN. EMBED. HILTI KB-TZ. ICC ESR-1917 OR APPROVED EQUAL (6) TOTAL PER CABINET.
2. CONCRETE: 5" THICK x 2,500 PSI. (MIN. REQ'D).
3. SOIL BEARING PRESSURE: 500 PSF. (MIN. REQ'D).

FOR ALL DETAILS REFER TO SEISMIC DWG. FOR EACH CABINET MOUNTING

3) DIMENSIONS ARE IN INCHES

WAVE RIDER 4 BATTERY CABINET (51" WIDE)			SHT 1 OF 1
CRUCIAL POWER PRODUCTS		SUBJECT TO CHANGE WITHOUT NOTICE	
DRAWN : SS	4/17/24	420-TD-015	REV A
APPVD : HN	4/17/24		

BATTERY CABINET (80KVA THRU 160KVA), LONG LIFE BATTERY

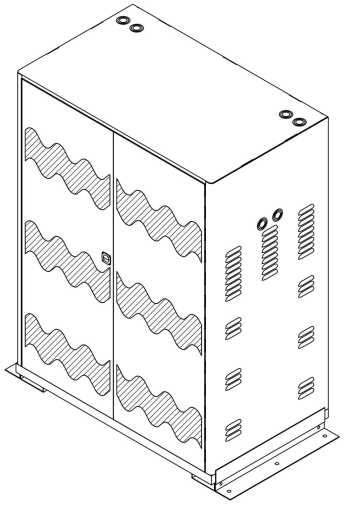

ISO VIEW SHOWN WITH SEISMIC BRACKETS

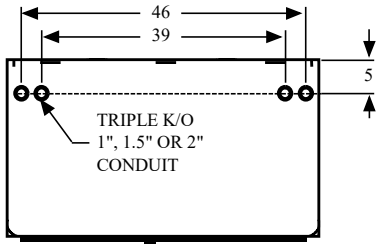

TOP VIEW

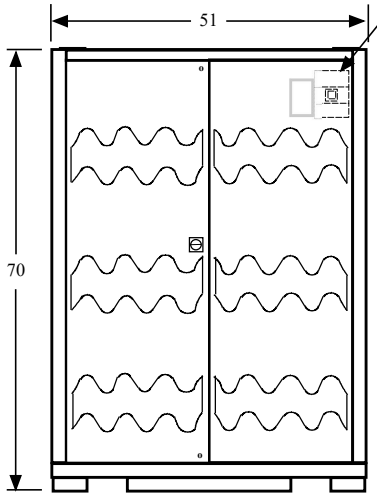

FRONT VIEW

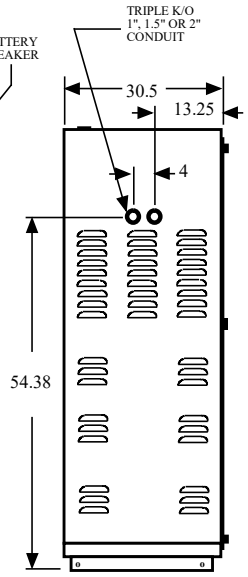

SIDE VIEW

INSTALLATION WITH SEISMIC BRACKETS FOR ZONE 4 BOTTOM VIEW

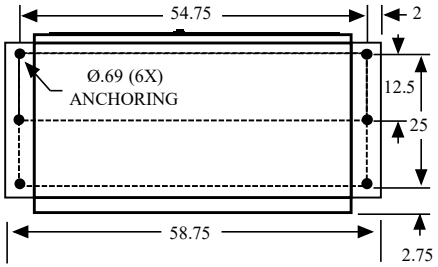

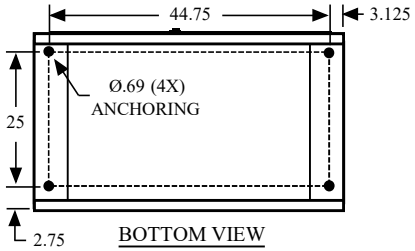

BOTTOM VIEW

NOTES:

1) CONSTRUCTION:NEMA1 INDOOR

2) OPTIONAL SEISMIC BRACKETS AVAILABLE:

ANCHORS FOR EXTERNAL SEISMIC BRACKET:

1. USE 1/2" DIA x 2-3/8"MIN. EMBED. HILTI KB-TZ. ICC ESR-1917 OR APPROVED EQUAL (6) TOTAL PER CABINET.
2. CONCRETE: 5" THICK x 2,500 PSI. (MIN. REQ'D).
3. SOIL BEARING PRESSURE: 500 PSF. (MIN. REQ'D).

FOR ALL DETAILS REFER TO SEISMIC DWG. FOR EACH CABINET MOUNTING

3) DIMENSIONS ARE IN INCHES

RECOMMENDED SYSTEM LAYOUT

LONG LIFE BATTERY

BATTERY	BATTERY CABINET QTY 90 MIN.	BATTERY CABINET QTY 120 MIN.
80KVA/64KW	**2**	**3**
100KVA/80KW	**3**	**3**
120KVA/96KW	**3**	**4**
160KVA/128KW	**4**	**5**

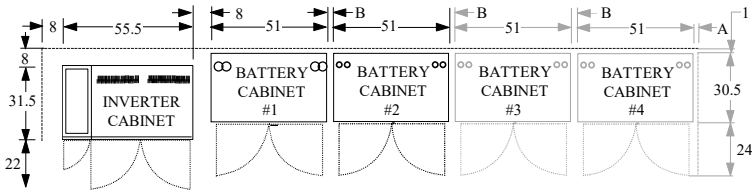

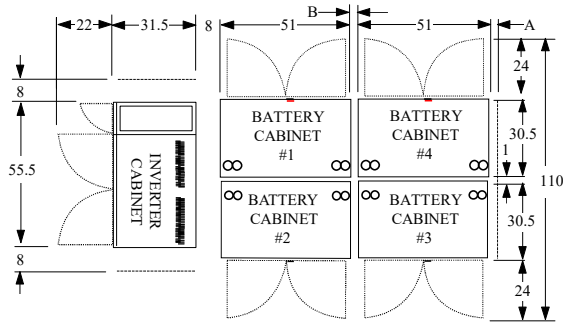

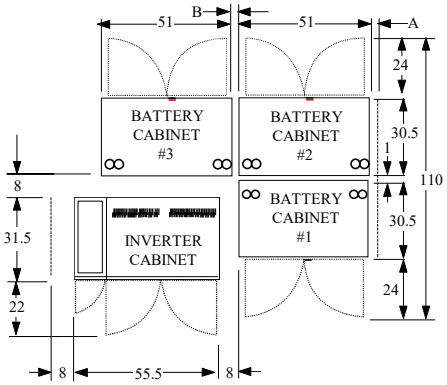

B	**1.0"**	**8.0"**
A	**1.0"**	**4.0"**
DIM	**WITHOUT EXTERNAL SEISMIC**	**WITH EXTERNAL SEISMIC**

WAVE RIDER 4 BATTERY CABINET (51" WIDE)

SHT 1 OF 1

CRUCIAL POWER PRODUCTS

SUBJECT TO CHANGE WITHOUT NOTICE

DRAWN : SS	4/17/24	420-TD-016	REV A
APPVD : HN	4/17/24		

BATTERY CABINET (10KVA THRU 60KVA)
(INTEGRATED BRACKETS)

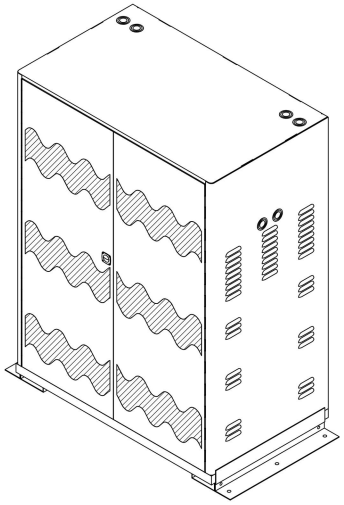

ISO VIEW SHOWN WITH SEISMIC BRACKETS

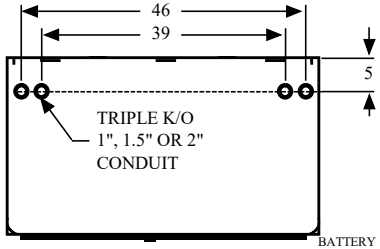

TOP VIEW

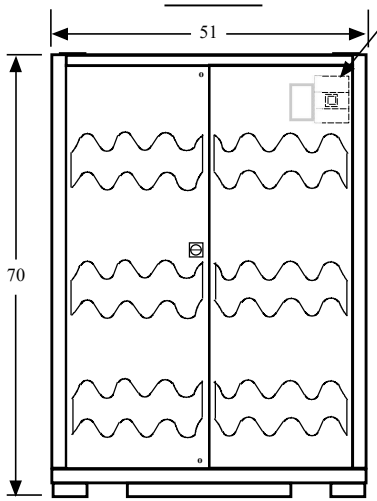

FRONT VIEW

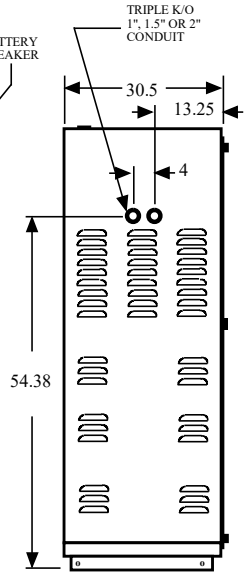

SIDE VIEW

INSTALLATION WITH INTEGRATED SEISMIC BRACKETS FOR ZONE 4 BOTTOM VIEW

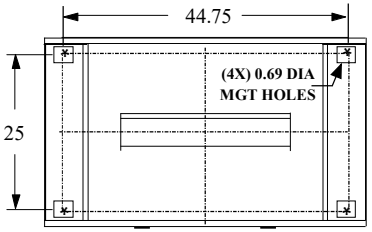

BOTTOM VIEW

*- DENOTES ANCHOR LOCATION

RECOMMENDED SYSTEM LAYOUT

STANDARD VRLA BATTERY

KVA/KW	BATTERY CABINET QTY 90 MIN.	BATTERY CABINET QTY 120 MIN.
10KVA/8KW	**1**	**1**
20KVA/16KW	**1**	**1**
30KVA/24KW	**1**	**1**
40KVA/32KW	**2**	**2**
50KVA/40KW	**2**	**2**
60KVA/48KW	**2**	**2**

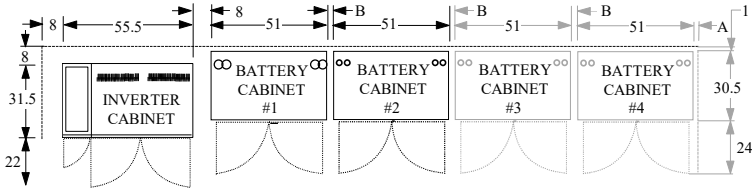

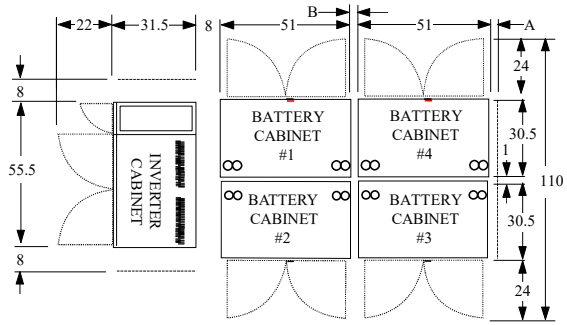

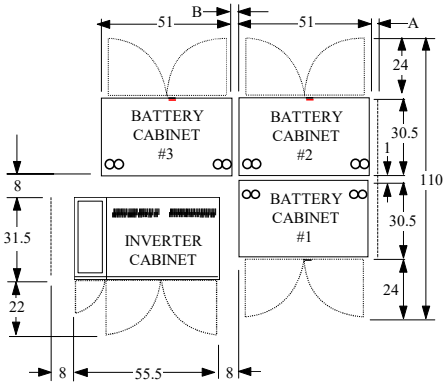

B	**1.0"**
A	**1.0"**
DIM	**WITH INTEGRATED SEISMIC**

NOTES:

1) CONSTRUCTION: NEMA1 INDOOR

ANCHORS FOR INTEGRATED SEISMIC MOUNTING:

1. USE 5/8" DIA x 3-3/4" MIN. EMBED HILTI KB-TZ ANCHORS, ICC ESR-1917 (LARR# 25701) OR APPROVED EQUAL (4) TOTAL PER CABINET, (2) PER ANCHOR BRACKET
2. CONCRETE 5" THICK x 2,500 PSI (MIN. REQ'D).
3. SOIL BEARING PRESSURE 500 PSF (MIN. REQ'D)

FOR ALL DETAILS REFER TO SEISMIC DWG. FOR EACH CABINET MOUNTING

2) DIMENSIONS ARE IN INCHES

WAVE RIDER 4 BATTERY CABINET (51" WIDE)	SHT 1 OF 1

CRUCIAL POWER PRODUCTS

SUBJECT TO CHANGE WITHOUT NOTICE

DRAWN : SS	4/17/24	420-TD-017	REV A
APPVD : HN	4/17/24		

BATTERY CABINET (80KVA THRU 160KVA)
(INTEGRATED BRACKETS)

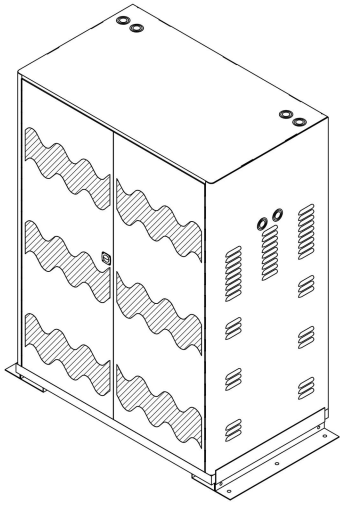

ISO VIEW SHOWN WITH SEISMIC BRACKETS

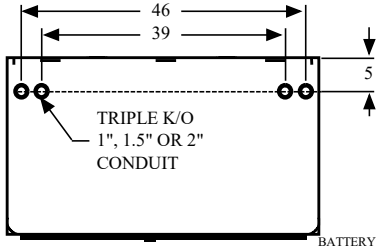

TOP VIEW

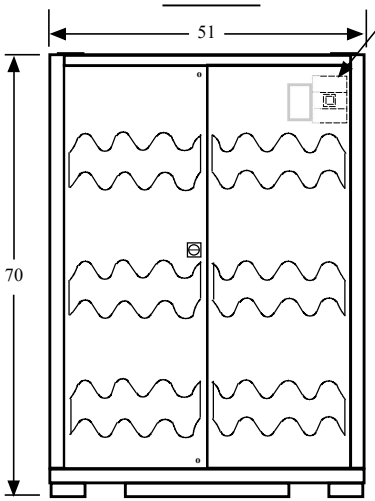

FRONT VIEW

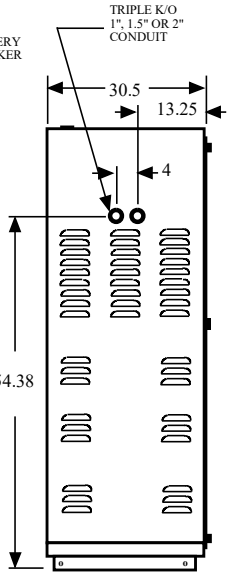

SIDE VIEW

INSTALLATION WITH INTEGRATED SEISMIC BRACKETS FOR ZONE 4 BOTTOM VIEW

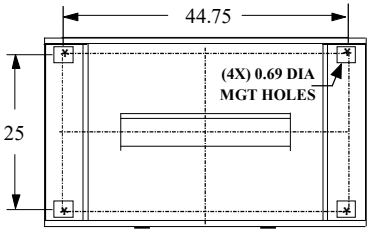

BOTTOM VIEW

*- DENOTES ANCHOR LOCATION

RECOMMENDED SYSTEM LAYOUT

STANDARD VRLA BATTERY

KVA/KW	BATTERY CABINET QTY 90 MIN.	BATTERY CABINET QTY 120 MIN.
80KVA/64KW	**2**	**3**
100KVA/80KW	**3**	**4**
120KVA/96KW	**4**	**4**
160KVA/128KW	**LONG LIFE BATTERY ONLY**	**LONG LIFE BATTERY ONLY**

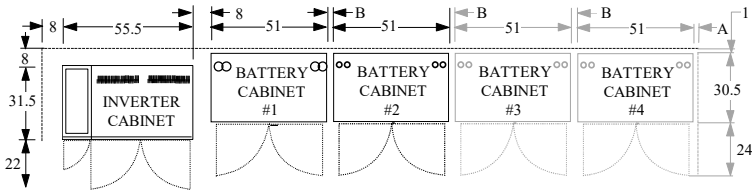

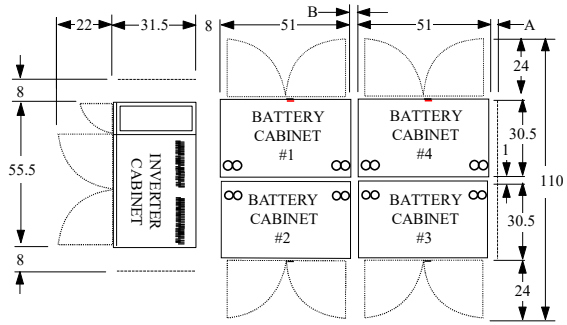

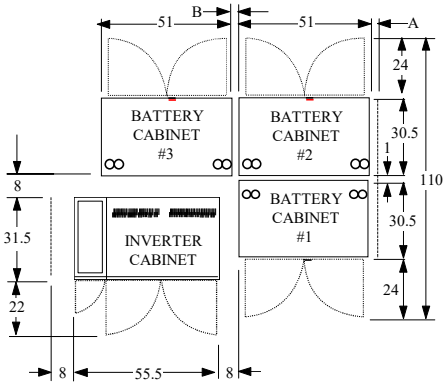

B	**1.0"**
A	**1.0"**
DIM	**WITH INTEGRATED SEISMIC**

NOTES:

1) CONSTRUCTION: NEMA1 INDOOR

ANCHORS FOR INTEGRATED SEISMIC MOUNTING:

1. USE 5/8" DIA x 3-3/4" MIN. EMBED. HILTI KB-TZ ANCHORS, ICC ESR-1917 (LARR# 25701) OR APPROVED EQUAL (4) TOTAL PER CABINET, (2) PER ANCHOR BRACKET
2. CONCRETE 5" THICK x 2,500 PSI (MIN. REQ'D).
3. SOIL BEARING PRESSURE 500 PSF (MIN. REQ'D)

FOR ALL DETAILS REFER TO SEISMIC DWG. FOR EACH CABINET MOUNTING

2) DIMENSIONS ARE IN INCHES

WAVE RIDER 4 BATTERY CABINET (51" WIDE)

SHT 1 OF 1

CRUCIAL POWER PRODUCTS

SUBJECT TO CHANGE WITHOUT NOTICE

DRAWN : SS	4/17/24	420-TD-018	REV A
APPVD : HN	4/17/24		

REMOTE STATUS PANEL

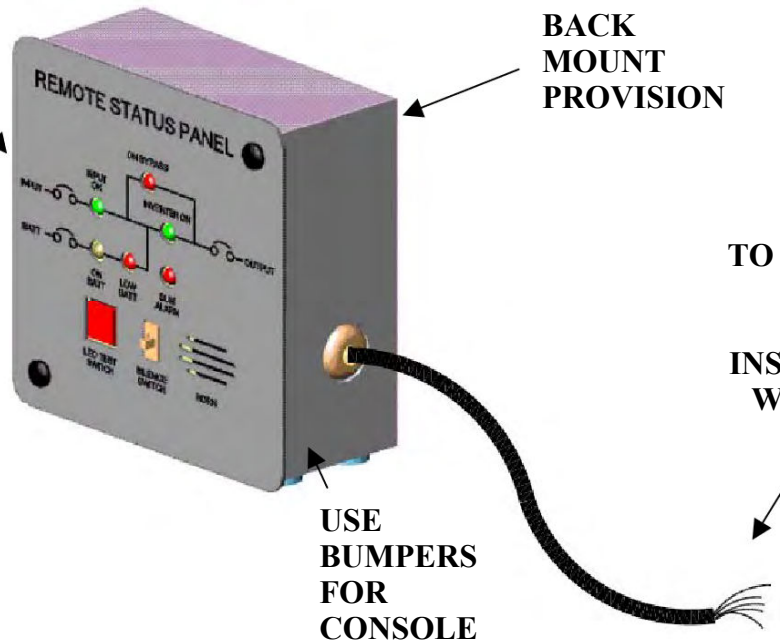

Remote Status Panel displays the following:	
INPUT OK:	Input power is within acceptable range
INVERTER ON:	Inverter is on
ON BYPASS:	Unit is on Bypass Mode
ON BATT:	Unit is running from Battery
LOW BATT:	Battery voltage is at low voltage before shutdown
SUM ALARM:	Unit is on critical alarm such as: Over temperature, DC OV/UV
HORN:	Audible warning for alarm condition
SILENCE WATCH:	Silences the audible warning
LED TEST:	Tests the LED's by push in

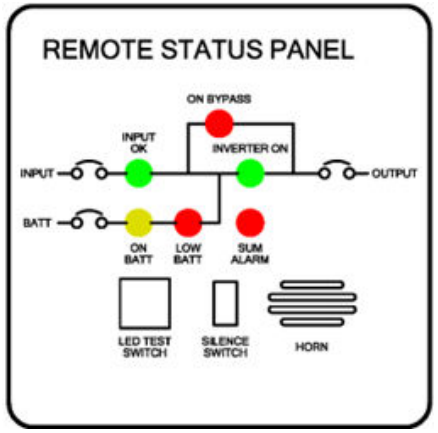

NOTES:

1. ALL DIMENSIONS ARE IN INCHES.
2. 7.5KW CAN BE IN 39" OR 51" WIDE CABINET DEPENDING ON THE BATTERY TYPE.

REMOTE STATUS PANEL ASSEMBLY			SHT 1 OF 1
CRUCIAL POWER PRODUCTS — SUBJECT TO CHANGE WITHOUT NOTICE			
DRAWN : M.TANG	12/07/22	410-SV-TD-014	REV A
APPVD : H.N	12/07/22		

MAKE BEFORE BREAK EXTERNAL WRAP AROUND BY-PASS SWITCH

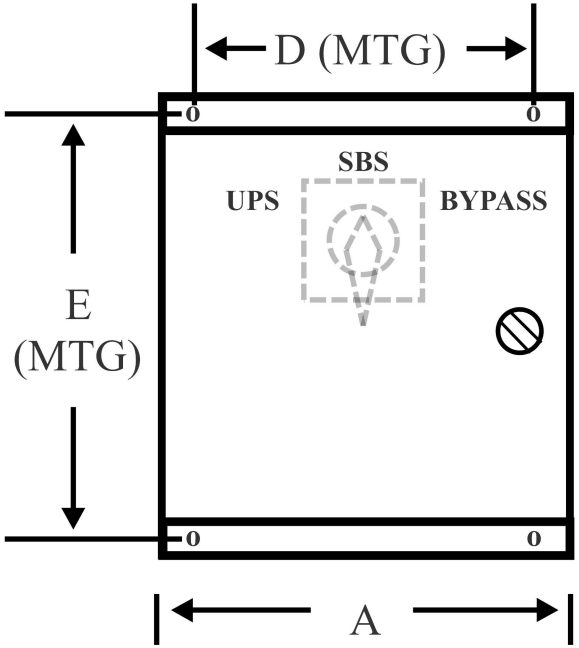

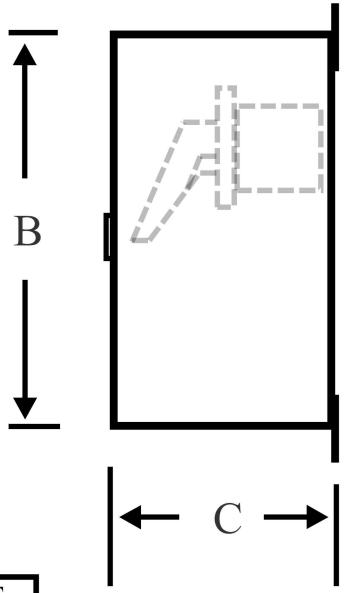

RATING	VOLTAGE	DIM A	DIM B	DIM C	DIM D (MTG)	DIM E (MTG)
350 AMPS	600V	30	36	16	28.5	34.5
240 AMPS	600V	30	30	12	28.5	28.5
175 AMPS	600V	20	20	12	18.5	18.5
110 AMPS	600V	14	16	10	12	16.75
55 AMPS	600V	14	16	8	12	16.75

NOTES:

1) SWITCH CONTACTS ARE THREE PHASE L-NEUTRAL "MAKE BEFORE-BREAK"
2) CONTACTS MARKED "UPS" ARE CLOSED IN THE "UPS" POSITION
3) CONTACTS MARKED "BYPASS" ARE CLOSED IN THE "BYPASS" POSITION
4) CONTACTS MARKED "SBS" ARE CLOSED IN THE "SBS" POSITION
5) WRAP AROUND BY-PASS SWITCH IS FOR SAME INPUT/OUTPUT VOLTAGES ONLY
6) WRAP AROUND BY-PASS SWITCH CAN ONLY BE USED WITHOUT ANY BUILT-IN SECONDARY DISTRIBUTION CIRCUIT BREAKERS IN UPS

WAVE RIDER 3 / 4 EXTERNAL WRAP AROUNDBYPASS SWITCH			SHT 1 OF 1
CRUCIAL POWER PRODUCTS SUBJECT TO CHANGE WITHOUT NOTICE			
DRAWN : SS	4/17/24	415-TD-016	REV A
APPVD: HN	4/17/24		

REVISION				
REV	ECO	DESCRIPTION	DATE	APPV'D
X2		PRELIMINARY	1/15/14	H.N.
A	16869	NEW RELEASE	3/6/15	H.N.
B	11694	UPDATED FOR THE REVISED BASE	11/3/17	H.N.

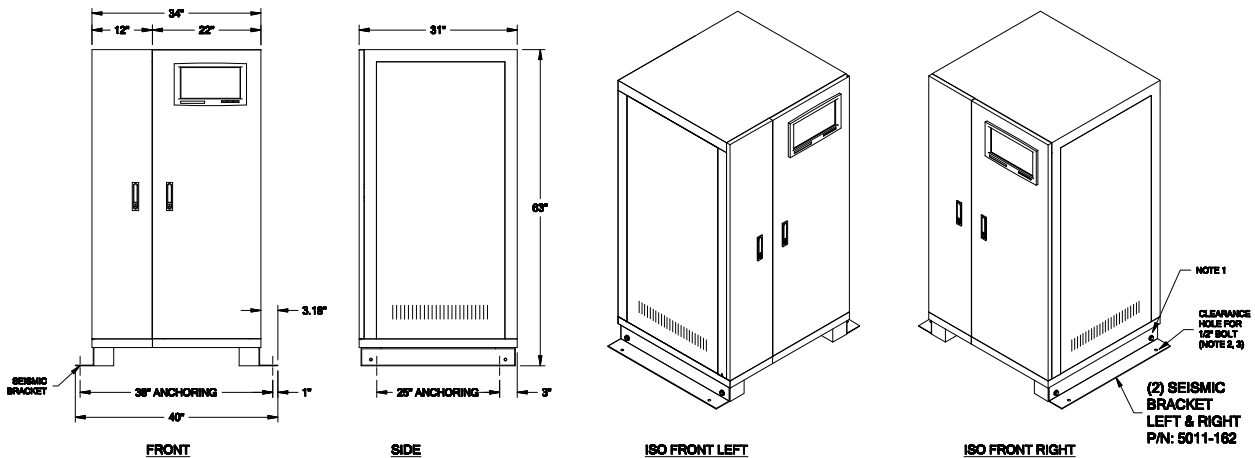

NOTES:

1) ASSEMBLE SEISMIC BRACKETS TO CABINET USING SUPPLIED 1/2-13 HEX BOLT, PRIOR TO SECURING CABINET TO FINAL LOCATION.
2) INDICATED MOUNTING HARDWARE TO BE SUPPLIED BY CUSTOMER, REFER TO LOCAL CODES FOR BOLT TYPE AND LENGTH.

INVERTER CABINET
(10KVA THRU 60 KVA)

TITLE	ANCHORING BRACKET INSTALLATION				
CADD:	S.S.	8/14/12	SIZE B	DWG 6001-277	REV B
CHKD:	SHERRI S.	8/14/12			
APPV'D:	R. VERA	8/14/12	SCALE:	EST. WT:	SHT 1 OF 2

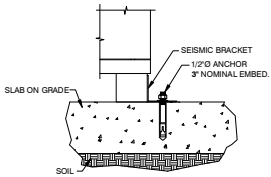

(2) ANCHORS REQ'D PER ANCHOR BRACKET
(4) ANCHORS REQ'D PER UNIT

1 ANCHOR DETAIL

NOTES:
1. DESIGNED PER THE 2021 IBC / 2022 CBC / 2023 LABC,
   Fa = 1.2 & Ss = 1.82
2. STORAGE CAPACITY: **2,500#** MAX. WEIGHT.
3. ANCHORS: HILTI KWIK BOLT TZ 2,
   ICC **#ESR-4266** W/ LABC SUPPLEMENT
4. CONCRETE: **5"** THICK x **2,500** PSI.
5. SOIL BEARING PRESSURE: **500** PSF. (MIN. REQ'D).
6. EVALUATION BASED ON NORTHRIDGE LOCATION
   (ONE OF THE HIGHEST LA FAULT AREAS)
   WITH THE FOLLOWING CALCULATION AS A TYPICAL EXAMPLE.
   (ASSUMED GROUND FLOOR INSTALLATION)

LOADS & DISTRIBUTION: INVERTER CABINET

ANALYSIS BASED ON SECTION 13.3 OF THE ASCE 7-16 SPECIFICATION
REFERENCED IN CHAPTER 16 OF THE 2021 IBC/2022 CBC/2023 LABC

Fp (13.3-1)= 0.4 x ap x S_{DS} x Wp/ (Rp/ Ip)	0.234 x Wp	
Fp (13.3-2)= 1.6 x S_{DS} x Ip x Wp	2.336 x Wp	SHALL NOT BE GREATER THAN
Fp (13.3-3)= 0.2 x S_{DS} x Ip x Wp	0.438 x Wp	SHALL NOT BE LESS THAN

SITE CLASS = D
Fa = **1.2**
Ss = **1.82**
S_{DS} = 1.46
Ip = 1.00
Rp = 2.5 — ASCE 7-16 Table 13.5-1
ap = 1 — ASCE 7-16 Table 13.5-1

Wp = **2500 LB**

0.7Fp = 0.7*0.438*Wp
= 0.31*2500 LB
= 767 LB

OVERTURNING ANALYSIS:

CABINET HEIGHT, Ht = 63.0 IN
ANCHORS SPACING, D = 25.0 IN

Mot = Vtotal*(1/2 Ht)
= 767 LB * 63 IN * 1/2
= 24,145 IN-LB

Mst = Wp*D/2
= 2500 LB * 25 IN/2
= 31,250 IN-LB

Puplift = (Mot - 0.6*Mst)/D
= (24145 IN-LB - 0.6 * 31250 IN-LB)/25 IN
= 216 LB <= UPLIFT

ANCHORS
ALLOWABLE CAPACITY PER ICC REPORT AND ACI 318-14 CHAPTER 17
PULLOUT : 1170 LB — $T_{allowable, ASD}$
SHEAR : 2390 LB — $V_{allowable, ASD}$

COMBINED STRESS = (216 LB/2340 LB) + (767 LB/9560 LB)
= 0.17 < 1.2 OK

USE 1/2"Ø x 3"MIN. EMBED. HILTI KB-TZ2 (ICC ESR-4266) OR APPROVED EQUAL
(4) PER CABINET

CALCULATIONS

ADDRESS:
POWER COMPANY
800 CESAR A AVE
NORTHRIDGE, CA 91324

REV.	DATE	BY	DESCRIPTION

SEIZMIC
EST. 1985
SEIZMIC ENGINEERING, INC.
1130 E. Cypress St.
Covina, California 91724
Tel.(909)869-0989

DRAWN BY:	M.V. / T.C.
DATE:	01/25/24
LAST REV. BY:	
REV. DATE:	
TYPE:	
SCALE:	N.T.S.
APRV'D BY:	SALE. FATEEN

REGISTERED PROFESSIONAL ENGINEER
No. 25909
CIVIL
STATE OF CALIFORNIA
EXPIRES
12-31-2025

DESCRIPTION:
CABINET DETAILS

DRAWING NUMBER:
24-0186-C

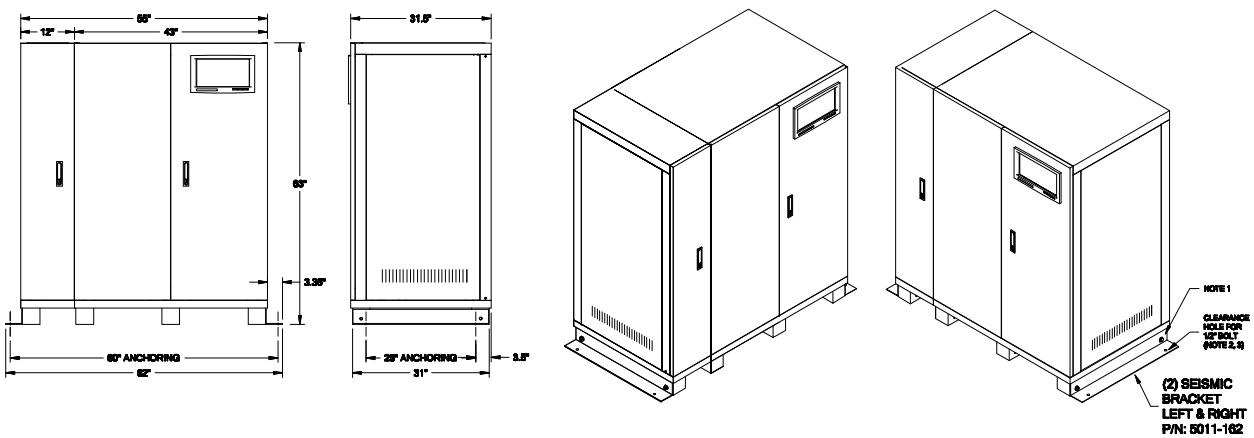

FRONT

SIDE

ISO FRONT LEFT

ISO FRONT RIGHT

(80KVA THRU 160 KVA)

NOTES:

1) ASSEMBLE SEISMIC BRACKETS TO CABINET USING SUPPLIED 1/2-13 HEX BOLT, PRIOR TO SECURING CABINET TO FINAL LOCATION.
2) INDICATED MOUNTING HARDWARE TO BE SUPPLIED BY CUSTOMER, REFER TO LOCAL CODES FOR BOLT TYPE AND LENGTH.

SIZE	DWG		REV
B		6001-277	B
SCALE:		EST. WT:	SHT 2 OF 2

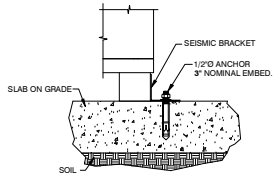

(2) ANCHORS REQ'D PER ANCHOR BRACKET
(4) ANCHORS REQ'D PER UNIT

1 ANCHOR DETAIL

NOTES:
1. DESIGNED PER THE 2021 IBC / 2022 CBC / 2023 LABC, Fa = 1.2 & Ss = 1.82
2. STORAGE CAPACITY: **4,000#** MAX. WEIGHT.
3. ANCHORS: HILTI KWIK BOLT TZ 2, ICC **#ESR-4266** W/ LABC SUPPLEMENT
4. CONCRETE: **5"** THICK x **2,500** PSI.
5. SOIL BEARING PRESSURE: **500** PSF. (MIN. REQ'D).
6. EVALUATION BASED ON NORTHRIDGE LOCATION (ONE OF THE HIGHEST LA FAULT AREAS) WITH THE FOLLOWING CALCULATION AS A TYPICAL EXAMPLE. (ASSUMED GROUND FLOOR INSTALLATION)

LOADS & DISTRIBUTION: INVERTER CABINET

ANALYSIS BASED ON SECTION 13.3 OF THE ASCE 7-16 SPECIFICATION
REFERENCED IN CHAPTER 16 OF THE 2021 IBC/2022 CBC/2023 LABC

Fp (13.3-1)= 0.4 x ap x S_{DS} x Wp/ [Rp/ Ip]	0.234 x Wp	
Fp (13.3-2)= 1.6 x S_{DS} x Ip x Wp	2.336 x Wp	SHALL NOT BE GREATER THAN
Fp (13.3-3)= 0.3 x S_{DS} x Ip x Wp	0.438 x Wp	SHALL NOT BE LESS THAN

SITE CLASS = D
Fa = **1.2**
Ss = **1.83**
S_{DS} = 1.46
Ip = 1.00
Rp = 2.5 ASCE 7-16 Table 13.5-1
ap = 1 ASCE 7-16 Table 13.5-1

Wp = **4000 LB**

0.7Fp = 0.7*0.438*Wp
= 0.31*4000 LB
= 1,226 LB

OVERTURNING ANALYSIS:

CABINET HEIGHT, Ht = 63.0 IN
ANCHORS SPACING, D = 25.0 IN

Mot = Vtotal*(1/2 Ht)
= 1226 LB * 63 IN * 1/2
= 38,632 IN-LB

Mst = Wp*D/2
= 4000 LB * 25 IN/2
= 50,000 IN-LB

Puplift = (Mot - 0.6*Mst)/D
= (38632 IN-LB - 0.6 * 50000 IN-LB)/25 IN
= 345 LB <= UPLIFT

ANCHORS
ALLOWABLE CAPACITY PER ICC REPORT AND ACI 318-14 CHAPTER 17
PULLOUT : 1170 LB $T_{allowable, ASD}$
SHEAR : 2390 LB $V_{allowable, ASD}$

COMBINED STRESS = (345 LB/2340 LB) + (1226 LB/9560 LB)
= 0.28 < 1.2 OK

USE 1/2"Ø x 3" MIN. EMBED. HILTI KB-TZ2 (ICC ESR-4266) OR APPROVED EQUAL
(4) PER CABINET

CALCULATIONS

ADDRESS:
POWER COMPANY
9301 TAMPA AVE.
NORTHRIDGE, CA 91324

REV.	DATE	BY	DESCRIPTION
△			
△			
△			
△			
△			

SEIZMIC
EST. 1985
SEIZMIC ENGINEERING, INC.
1130 E. Cypress St.
Covina, California 91724
Tel.(909)869-0989

DRAWN BY:	M.V. / T.C.
DATE:	01/25/24
LAST REV. BY:	
REV. DATE:	
TYPE:	
SCALE:	N.T.S.
APRV'D BY:	SAL E. FATEEN

REGISTERED PROFESSIONAL ENGINEER
SAL E. FATEEN
No. 25999
CIVIL
STATE OF CALIFORNIA
EXPIRES
12-31-2025

DESCRIPTION:
CABINET DETAILS

DRAWING NUMBER:
24-0186-D

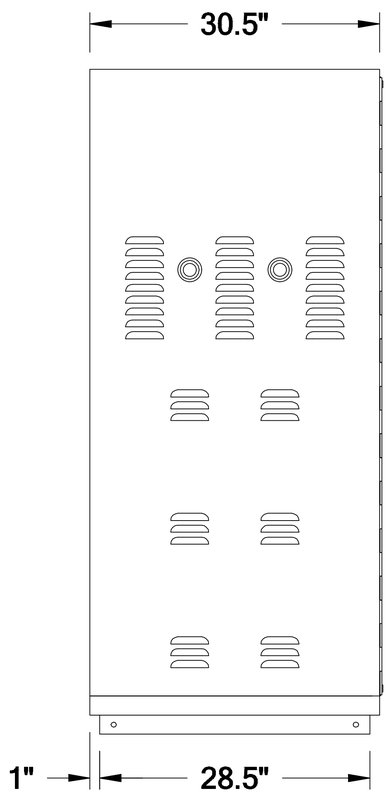

SIDE

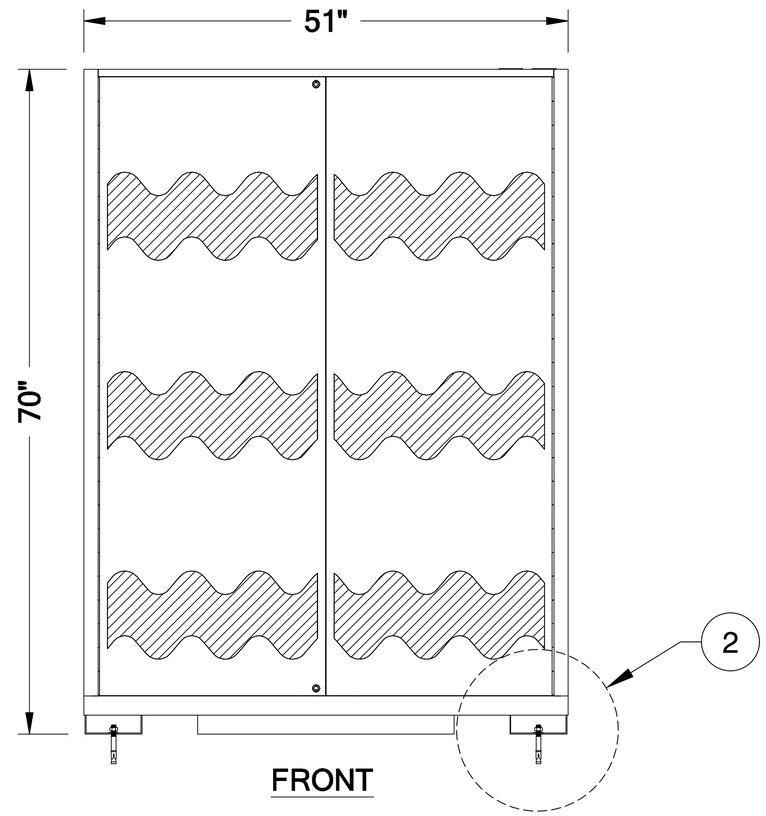

FRONT

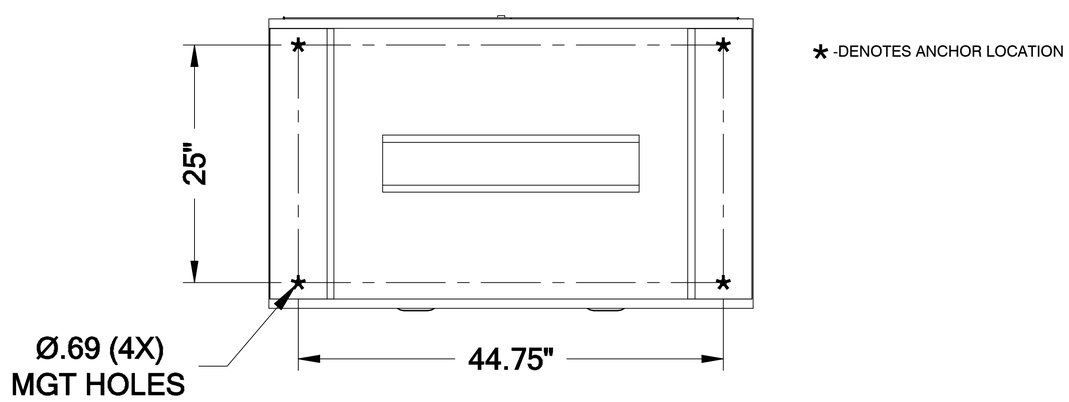

BOTTOM

CABINET ELEVATIONS

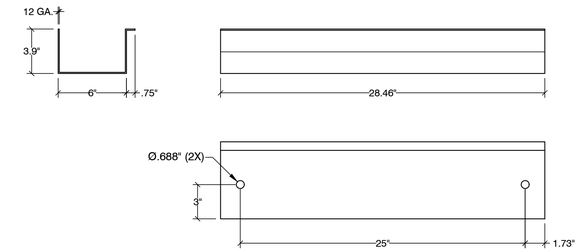

1 ANCHOR BRACKET DETAIL

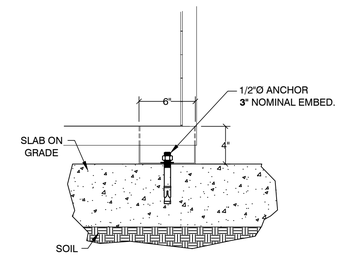

(4) ANCHORS REQ'D PER UNIT

2 ANCHOR DETAIL

NOTES:
1. DESIGNED PER THE 2021 IBC / 2022 CBC / 2023 LABC,
   Fa = 1.2 & Ss = 1.82
2. STORAGE CAPACITY: **4,640#** MAX. WEIGHT.
3. ANCHORS: HILTI KWIK BOLT TZ 2,
   ICC **#ESR-4266** W/ LABC SUPPLEMENT
4. CONCRETE: **5"** THICK x **2,500** PSI.
5. SOIL BEARING PRESSURE: **500** PSF. (MIN. REQ'D).
6. EVALUATION BASED ON NORTHRIDGE LOCATION
   (ONE OF THE HIGHEST LA FAULT AREAS)
   WITH THE FOLLOWING CALCULATION AS A TYPICAL EXAMPLE.
   (ASSUMED GROUND FLOOR INSTALLATION)

LOADS & DISTRIBUTION:

ANALYSIS BASED ON SECTION 13.3 OF THE ASCE 7-16 SPECIFICATION
REFERENCED IN CHAPTER 16 OF THE 2021 IBC/2022 CBC/2023 LABC

Fp (13.3-1)= 0.4 x ap x S_{DS} x Wp/ [Rp/ Ip]	0.234 x Wp	
Fp (13.3-2)= 1.6 x S_{DS} x Ip x Wp	2.336 x Wp	SHALL NOT BE GREATER THAN
Fp (13.3-3)= 0.3 x S_{DS} x Ip x Wp	0.438 x Wp	SHALL NOT BE LESS THAN

SITE CLASS = D
Fa = **1.2**
Ss = **1.82**
S_{DS} = 1.46
Ip = 1.00
Rp = 2.5 ASCE 7-16 Table 13.5-1
ap = 1 ASCE 7-16 Table 13.5-1

Wp = **4640 LB**

0.7Fp = 0.7*0.438*Wp
= 0.31*4640 LB
= 1,423 LB

OVERTURNING ANALYSIS:

CABINET HEIGHT, Ht = 70.0 IN
ANCHORS SPACING, D = 25.0 IN

Mot = Vtotal*(1/2 Ht)
= 1423 LB * 70 IN * 1/2
= 49,792 IN-LB

Mst = Wp*D/2
= 4640 LB * 25 IN/2
= 58,000 IN-LB

Puplift = (Mot - 0.6*Mst)/D
= (49792 IN-LB - 0.6 * 58000 IN-LB)/25 IN
= 600 LB <= UPLIFT

ANCHORS
ALLOWABLE CAPACITY PER ICC REPORT AND ACI 318-19 CHAPTER 17
PULLOUT : 1170 LB $T_{allowable, ASD}$
SHEAR : 2390 LB $V_{allowable, ASD}$

COMBINED STRESS = (600 LB/2340 LB) + (1423 LB/9560 LB)
= 0.41 < 1.2 OK

USE 1/2"Ø x 3"MIN. EMBED. HILTI KB-TZ2 (ICC ESR-4266) OR APPROVED EQUAL
(4) PER CABINET

CALCULATIONS

ADDRESS:
POWER COMPANY
9301 TAMPA AVE
NORTHRIDGE, CA 91324

REV.	DATE	BY	DESCRIPTION

SEIZMIC
EST. 1985
SEIZMIC ENGINEERING, INC.
1130 E. Cypress St.
Covina, California
91724
Tel.(909)869-0989

DRAWN BY:	M.V. / T.C.
DATE:	01/11/23
LAST REV. BY:	
REV. DATE:	
TYPE:	
SCALE:	N.T.S.
APRV'D BY:	SAL E. FATEEN

REGISTERED PROFESSIONAL ENGINEER
SAL E. FATEEN
No. 25069
CIVIL
STATE OF CALIFORNIA
EXPIRES
12-31-2025

DESCRIPTION:
CABINET DETAILS

DRAWING NUMBER:
23-0067-B